ORDER NO. ACED060117C8

Service Manual

AUTOMOTIVE AFTERMARKET

CY-TUP153N

TV Tuner

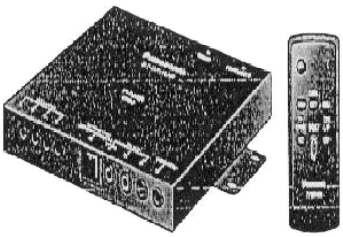

SPECIFICATIONS

Specifications*

General	
Power Supply	DC 12V (11V - 16V), Test Voltage 14.4V Negative Ground
Current Consumption	Less than 0.5A
Video Output Signal	Composite Video Signal, 1.0
	Vp-p (75)
Audio Output Signal	1 Vrms at 400 Hz
	(With 100% Modulation)
Dimensions (W×H×D)**	156×22.5×150mm
Weight**	650 g
TV Section	
Usable Sensitivity	36 dB/ V
Diversity Antenna	
Power Supply	DC 12V (11V - 16V), Test Voltage 14.4V Negative Ground
Current Consumption	Less than 0.1A
Output Impedance	75 × 4 (with mini plug)
Cord Length	6 m
Dimensions (W×H×D)**	480×340×20mm
Weight** (each unit)	330 g (including the cable)

* Specifications and the design are subject to possible modification without notice due to improvements. ** Dimensions and Weight shown are approximate. ** Above specifications comply with EIA standards.

© 2006 Matsushita Electric Industrial Co., Ltd. All rights reserved.
Unauthorized copying and distribution is a violation of law.

⚠ WARNING

1. ABOUT LEAD FREE SOLDER (PbF)

Distinction of PbF PCB:

PCBs (manufactured) using lead free solder will have a PbF stamp on the PCB.

Caution :

- Pb free solder has a higher melting point than standard solder; Typically the melting point is 50 - 70°F (30 - 40°C) higher. Please use a soldering iron with temperature control and adjust it to 700 ± 20°F (370 ± 10°C). In

case of using high temperature soldering iron, please be careful not to heat too long.

- Pb free solder will tend to splash when heated too high (about 1100°F/ 600°C)
- This lead free solder will be used for the products after serial No. 1,000,001.

2. FEATUERS

- Analog TV only
- Head Unit (The optional Head Unit: CQ-VD7003N, CQ-VD6503N, etc.)
- Expansion Module (The optional Hub unit: CY-EM100N)
- Compatible with both receiving systems PAL or SECAM
- 4ch Diversity TV Antenna system
- 12 Preset channels for each bands

3. REPLACEING THE FUSE

Use fuses of the same specified rating 3 amps. Using different substitutes or fuses with higher ratings, or connecting the unit directly without a fuse, could cause fire or damage to the stereo unit.

4. DIMENSIONS

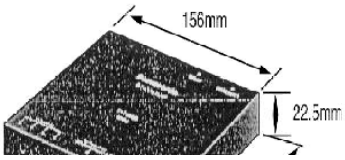

5. WIRING DIAGRAM

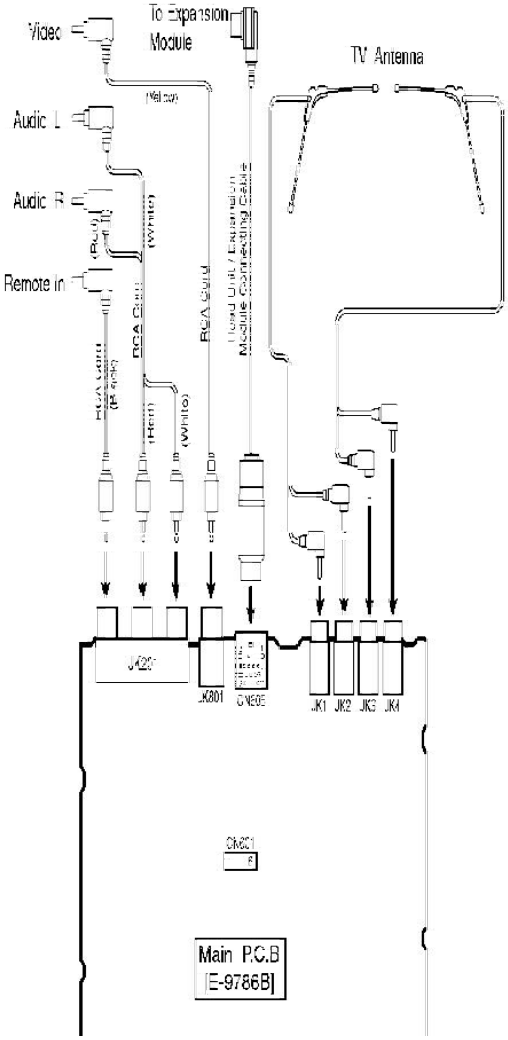

6. TERMINALS DESCRIPTION

IC601 : C2BBYY000199

PIN	Port	Description	I/O	(V)
1	NC	NC(GND connection)	I	0
2	ANT SEL1	Diver antenna control output 1	O	0
3	ANT SEL2	Diver antenna control output 2	O	0
4	ANT SEL3	Diver antenna control output 3	O	0
5	ANT SEL4	Diver antenna control output 4	O	0
6	DIVER CONT	Free orchis adjustment mode control terminal (TEST mode: H)	O	0
7	ACC SENS	Accessories detection	I	5.1
8	BATT SENS	Battery detection	I	5.1
9	NC	NC(GND connection)	I	0
10	RESET	System reset input terminal	I	4.4
11	NC	NC(GND connection)	I	0
12	SELF WRITE	Control terminal for	O	0
13	IC/FLMD0	Terminal for internal connection and flash memory programming mode drawing in	-	0
14	X2	MAIN system clock departure Nobuko connection	-	2.7
15	X1	MAIN system clock departure Nobuko connection	I	2.6
16	REGC	Regulator output stability capacity connection	-	2.6
17	VSS	Grand potential for in	-	0
18	EVSS	Grand potential for external(the same potential as Vss)	-	0
19	VDD	Positive power supply supply terminal for in	-	5.1
20	EVDD	Positive power supply supply for external(the same potential as VDD)	-	5.1
21	NC	NC(GND connection)	I	0
22	NC	NC(GND connection)	I	0
23	NC	NC(GND connection)	I	0
24	TUNER PWR	TV TUNER POWER ON state output	O	0

PIN	Port	Description	I/O	(V)
25	NC	NC(GND connection)	I	0
26	NC	NC(GND connection)	I	0
27	NC	NC(GND connection)	I	0
28	NC	NC(GND connection)	I	0
29	NC	NC(GND connection)	I	0
30	NC	NC(GND connection)	I	0
31	NC	NC(GND connection)	I	0
32	SYS PWR	System power supply control output	O	5.1
33	MAIN PWR	The main power supply control output	O	5.1
34	SYS MUTE	System mute signal output	O	0
35	SIDE BRAKE	Parking brake detection	I	5.1
36	NC	NC(GND connection)	I	0
37	NC	NC(GND connection)	I	0
38	REMO DATA	External remote control signal input	I	5.2
39	REMO JDG	External remote control signal input detection	I	5.2
40	TV MUTE	Image mute signal output (L: Image mute release)	O	5.1
41	INIT DET1	Inducing detection 1	I	0
42	INIT DET2	Inducing detection 2	I	0
43	INIT DET3	Inducing detection 3	I	5.2
44	NC	NC(GND connection)	I	0
45	NC	NC(GND connection)	I	0
46	NC	NC(GND connection)	I	0
47	NC	NC(GND connection)	I	0
48	NC	NC(GND connection)	I	0
49	NC	NC(GND connection)	I	0
50	RX	Terminal for Flash rewriting	O	0
51	TX	Terminal for Flash rewriting	I	0
52	OSD DATA	OSD DATA output	O	4.3
53	NC	NC(GND connection)	I	0
54	OSD CLK	OSD CLK output	O	4.9
55	OSD CS	OSD CS control	O	3.7
56	OSD RESET	OSD RESET output (L: RESET ON)	O	5.1
57	SYNC JDG	OSDC synchronous signal detection (H: Signal detection)	I	5.1
58	BG/DK/I	BG/DK/I switch control output	O	0

PIN	Port	Description	I/O	(V)
59	AVREF	Standard voltage input 0 of A/D converter	-	5.1
60	AVSS	A/D converter grand potential	-	0
61	TV VCONT	TV electrolysis strength input	I	1.8
62	TV SD	There is a TV bureau and it detects it.	I	0
63	NC	NC(GND connection)	I	0
64	NC	NC(GND connection)	I	0
65	NC	NC(GND connection)	I	0
66	NC	NC(GND connection)	I	0
67	NC	NC(GND connection)	I	0
68	TUNER LOCK	TV tuner packing front end LOCK detection	I	0.2
69	TUNER EN	TV tuner packing front end ENABLE output	O	0
70	TUNER CLK	TV tuner packing front end clock output	O	0
71	NC	NC(GND connection)	I	0
72	TUNER DATA	TV tuner packing front end data output	O	0
73	NC	NC(GND connection)	I	0
74	NC	NC(GND connection)	I	0
75	NC	NC(GND connection)	I	0
76	NC	NC(GND connection)	I	0
77	NC	NC(GND connection)	I	0
78	NC	NC(GND connection)	I	0
79	NC	NC(GND connection)	I	0
80	NC	NC(GND connection)	I	0

7. IC BLOCK DIAGRAM

IC1 : AN5186FB-V

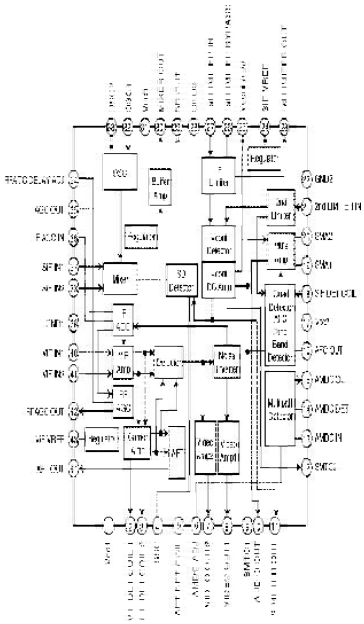

IC9 : C1EB00000101

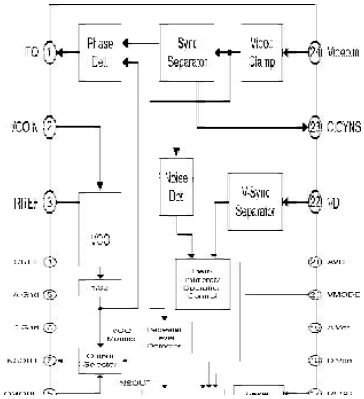

IC12 : C1AA00000751

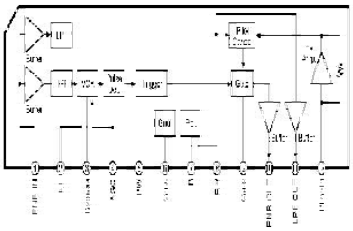

IC602 : AN8065S-EIV

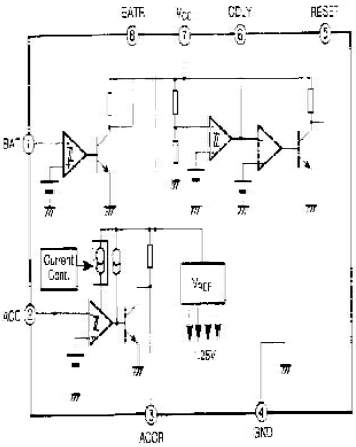

IC651 : C1AB00000393

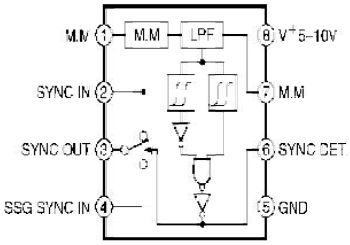

IC652 : C0JBAA000344

IC705 : C0CBADC00084

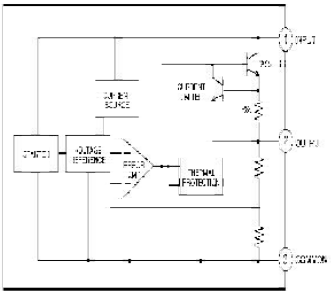

IC721 : C0CBACG00005

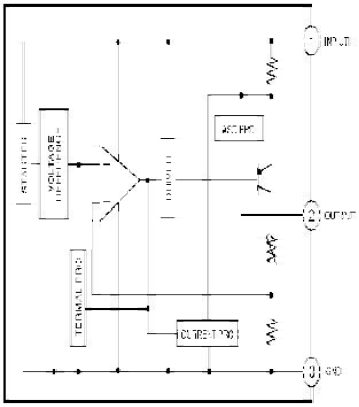

IC731: C0DBAJG00002

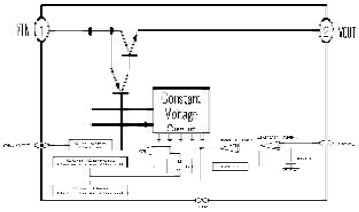

IC801 : C5ZBZ0000019

IC802 : C1AB00000163

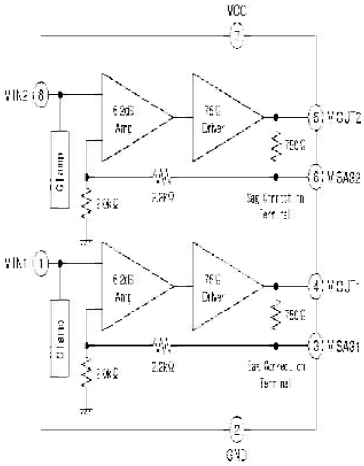

IC803 : C1AB00001852

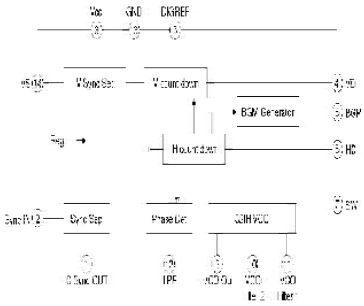

8. REPLACEMENT PARTS LIST

Notes :

1. **Be sure to make your orders of replacement parts according to this list.**
2. **Important safety notice: Components, identified by mark have special characteristics important for safety. When replacing any of these components, use only manufacturer's specified parts.**
3. **Location keys in the remarks column indicates the general location of the parts shown in the exploded drawing, as in a road map.**
4. **The marking (RTL) indicates that Retention Time is limited for this item. After the discontinuation of assembly in production, the item will continue to be available for a specific period of time. The retention period of availability is dependent on the type of assembly, and in accordance with the laws governing part and product retention. After the end of this period, the assembly will no longer be available.**

   - Order intake period is basically six months after the first shipment.

5. **“T” marks in remarks colum are indicated supply parts of PTW.**

Ref. No.	Part No.	Part Name & Description	Remarks
[E9786B] Main Block			
IC's AND TRANSISTORs			
IC1	AN5186FB-V	IC	T
IC9	C1EB00000101	IC	T
IC10	C1AA00000668	IC	T
IC12	C1AA00000751	IC	T
IC201	C0ABBA000063	IC	T
IC601	C2BBYY000199	IC	T
IC602	AN8065S-E1V	IC	T
IC651	C1AB00000393	IC	T
IC652	C0JBAA000344	IC	T
IC705	C0CBADC00084	IC	T
IC721	C0CBACG00005	IC	T
IC731	C0DBAJG00002	IC	T
IC801	C5ZBZ0000019	IC	T
IC802	C1AB00000163	IC	T
IC803	C1AB00001852	IC	T
PAC1	J3AAAAZ00009	Tuner	T
Q1	B1GDCFJJ0002	Transistor	T
Q2	B1GDCFJJ0002	Transistor	T
Q3	B1GDCFJJ0002	Transistor	T
Q4	B1GDCFJJ0002	Transistor	T
Q5	B1ABBD000002	Transistor	T
Q6	2SC4626J0L	Transistor	T
Q7	B1GBCFJJ0002	Transistor	T
Q8	2SD0601AHR	Transistor	T
Q17	B1GBCFJJ0002	Transistor	T
Q201	B1GDCFLL0010	Transistor	T
Q202	B1GDCFNN0002	Transistor	T
Q204	XN0F26100L	Transistor	T
Q601	B1GDCFNN0002	Transistor	T
Q751	B1BDEL000001	Transistor	T
Q752	B1GDJCEJ0002	Transistor	T
Q761	B1BBAC000007	Transistor	T
Q801	B1ABCF000052	Transistor	T
Q802	2SB0709AWL	Transistor	T
Q803	2SD0601AHR	Transistor	T
Q804	2SB0709AWL	Transistor	T
Q805	2SD0601AHR	Transistor	T
Q806	2SD0601AHR	Transistor	T
Q807	B1GBHBEA0004	Transistor	T
Q808	B1GDCFNN0002	Transistor	T
Q809	B1GBCFNN0004	Transistor	T
DIODEs			
D2	B0DCBF000003	Diode	T
D3	B0DCBF000003	Diode	T
D4	B0DCBF000003	Diode	T
D5	B0DCBF000003	Diode	T
D6	MA3X028TAL	Diode	T
D7	MA3X152E0L	Diode	T
D12	B0JCRC000002	Diode	T
D16	B0ECKL000001	Diode	T
D201	B0ADCJ000007	Diode	T
D203	B0ADCJ000020	Diode	T
D601	B0ACCK000005	Diode	T

Ref. No.	Part No.	Part Name & Description	Remarks
D602	B0ACCK000005	Diode	T
D603	B0ADCJ000007	Diode	T
D604	B0ACCK000005	Diode	T
D615	MAZ80510ML	Diode	T
D721	B0ECKL000001	Diode	T
D731	B0JCQD000002	Diode	T
D761	B0BC5R700008	Diode	T
D762	B0ECKL000001	Diode	T
D763	B0ECKP000002	Diode	T
D764	B0ACCK000005	Diode	T
D771	B0BA04700003	Diode	T
D801	B0ACCK000005	Diode	T
D803	B0BC5R700008	Diode	T
CAPACITORs			
C1	F1J1H470A732	Ceramic, 47PF 50WV	T
C2	F1J1H470A732	Ceramic, 47PF 50WV	T
C3	F1J1H470A732	Ceramic, 47PF 50WV	T
C4	F1J1H470A732	Ceramic, 47PF 50WV	T
C5	F1J1H102A733	Ceramic, 1000PF 50WV	T
C6	F1J1H102A733	Ceramic, 1000PF 50WV	T
C7	F1J1H102A733	Ceramic, 1000PF 50WV	T
C8	F1J1H102A733	Ceramic, 1000PF 50WV	T
C9	F1J1H151A785	Ceramic, 150PF 50WV	T
C10	F1J1H151A785	Ceramic, 150PF 50WV	T
C11	F1J1H151A785	Ceramic, 150PF 50WV	T
C12	F1J1H151A785	Ceramic, 150PF 50WV	T
C13	F1J1H102A733	Ceramic, 1000PF 50WV	T
C14	F1J1H102A733	Ceramic, 1000PF 50WV	T
C15	F1J1H102A733	Ceramic, 1000PF 50WV	T
C16	F1J1H102A733	Ceramic, 1000PF 50WV	T
C17	F1J1C104A148	Ceramic, 0.1 F 16WV	T
C18	ECA1CM100I	Electrolytic, 10 F 16WV	T
C19	F1J2A103A027	Ceramic, 0.01 F 100WV	T
C20	F1J1C105A173	Ceramic, 1 F 16WV	T
C21	F1J1H222A733	Ceramic, 2200PF 50WV	T
C22	F1H1C473A071	Ceramic, 0.047 F 16WV	T
C23	F1H1E223A011	Ceramic, 0.022 F 25WV	T
C24	F1J1H150A732	Ceramic, 10PF 50WV	T
C25	F1J1H150A732	Ceramic, 10PF 50WV	T
C26	F1H1H222A842	Ceramic, 2200PF 50WV	T
C27	F1H1C104A107	Ceramic, 0.1 F 16WV	T
C28	F1H1H222A842	Ceramic, 2200PF 50WV	T
C29	F1J1A2250004	Ceramic, 2.2 F 10WV	T
C30	F1H1E103A086	Ceramic, 0.01 F 25WV	T
C31	F1H1H220A860	Ceramic, 220PF 50WV	T
C32	F1J1C105A173	Ceramic, 1 F 16WV	T
C33	F1H1E102A034	Ceramic, 1000PF 25WV	T
C34	F1H1E103A086	Ceramic, 0.01 F 25WV	T
C36	ECA1AM101I	Electrolytic, 100 F 10WV	T
C37	F1J1C104A148	Ceramic, 0.1 F 16WV	T

Ref. No.	Part No.	Part Name & Description	Remarks
C38	ECA1AM101I	Electrolytic, 100 μF 10WV	T
C39	F1J1H181A732	Ceramic, 180PF 50WV	T
C40	F1H1E103A086	Ceramic, 0.01 μF 25WV	T
C41	F1J1C104A148	Ceramic, 0.1 μF 16WV	T
C42	F1H1E223A011	Ceramic, 0022 μF 25WV	T
C43	F1H1C104A107	Ceramic, 0.1 μF 16WV	T
C44	ECA1HM2R2I	Electrolytic, 2.2 μF 50WV	T
C45	F1J1C104A148	Ceramic, 0.1 μF 16WV	T
C46	ECA1CM100I	Electrolytic, 10 μF 16WV	T
C47	ECA1CM100I	Electrolytic, 10 μF 16WV	T
C48	ECA1CM220I	Electrolytic, 22 μF 16WV	T
C50	F1H1C473A071	Ceramic, 0.047 μF 16WV	T
C51	F1H1E123A086	Ceramic, 0.012 μF 25WV	T
C52	F1H1E223A011	Ceramic, 0.022 μF 25WV	T
C53	F1H1C104A107	Ceramic, 0.1 μF 16WV	T
C54	F1H1C104A107	Ceramic, 0.1 μF 16WV	T
C55	F1H1H222A842	Ceramic, 2200PF 50WV	T
C56	F1J2A103A027	Ceramic, 0.01 μF 100WV	T
C57	ECA1CM100I	Electrolytic, 10 μF 16WV	T
C58	F1J1C104A148	Ceramic, 0.1 μF 16WV	T
C59	F1H1E223A011	Ceramic, 0022 μF 25WV	T
C61	F1J1H222A733	Ceramic, 2200PF 50WV	T
C94	F1H0J1050010	Ceramic, 1 μF 6.3WV	T
C95	F1H1E103A086	Ceramic, 0.01 μF 25WV	T
C96	F1H1E103A086	Ceramic, 0.01 F 25WV	T
C97	F1J2A103A027	Ceramic, 0.01 F 100WV	T
C98	F1H1E103A086	Ceramic, 0.01 F 25WV	T
C99	ECA0JM101I	Electrolytic, 100 F 6.3WV	T
C100	F1H1H332A748	Ceramic, 3300PF 50WV	T
C102	F1J1H220A732	Ceramic, 22PF 50WV	T
C107	F1H1H152A842	Ceramic, 1500PF 50WV	T
C108	F1J1H330A732	Ceramic, 33PF 50WV	T
C110	F1J1A2250004	Ceramic, 2.2 F 10WV	T
C111	F1H1C104A107	Ceramic, 0.1 F 16WV	T
C120	F1H1C104A107	Ceramic, 0.1 F 16WV	T
C121	F1H1E103A086	Ceramic, 0.01 F 25WV	T
C122	F1H1H102A190	Ceramic, 1000PF 50WV	T
C123	F1H1E123A086	Ceramic, 0.012 F 25WV	T
C124	ECA1AM101I	Electrolytic, 100 F 10WV	T
C125	F1H1E103A086	Ceramic, 0.01 F 25WV	T
C126	F1H1E103A086	Ceramic, 0.01 F 25WV	T
C127	F1H1E103A086	Ceramic, 0.01 F 25WV	T
C128	ECA0JM101I	Electrolytic, 100 F 6.3WV	T

Ref. No.	Part No.	Part Name & Description	Remarks
C162	F1J0J4750003	Ceramic, 4.7 μF 6.3WV	T
C201	ECEA1HKA010I	Electrolytic, 1 μF 50WV	T
C202	F1H1E103A086	Ceramic, 0.01 μF 25WV	T
C204	ECA1CM100I	Electrolytic, 10 μF 16WV	T
C205	ECEA1HKA010I	Electrolytic, 1 μF 50WV	T
C206	F1J1H560A788	Ceramic, 56PF 50WV	T
C207	ECA1AM221I	Electrolytic, 220 μF 10WV	T
C208	F1J1C105A173	Ceramic, 1 μF 16WV	T
C209	ECA1CM100I	Electrolytic, 10 μF 16WV	T
C305	ECEA1HKA010I	Electrolytic, 1 μF 50WV	T
C306	F1J1H560A788	Ceramic, 56 μF 50WV	T
C309	ECA1CM100I	Electrolytic, 10 μF 50WV	T
C601	ECA0JM101I	Electrolytic, 100 μF 6.3WV	T
C602	F1H1C104A107	Ceramic, 0.1 μF 16WV	T
C603	F1H1C104A107	Ceramic, 0.1 μF 16WV	T
C604	ECA0JM221I	Electrolytic, 220 μF 6.3WV	T
C605	F1H1E103A086	Ceramic, 0.01 μF 25WV	T
C606	F1H1C104A107	Ceramic, 0.1 μF 16WV	T
C607	ECA0JM221I	Electrolytic, 220 μF 6.3WV	T
C608	F1H1A474A046	Ceramic, 0.47 μF 10WV	T
C609	F1H1A224A046	Ceramic, 0.22 μF 10WV	T
C610	F1H1C104A107	Ceramic, 0.1 μF 16WV	T
C612	ECA0JM221I	Electrolytic, 220 μF 6.3WV	T
C613	F1J1H102A733	Ceramic, 1000PF 50WV	T
C614	ECA0JM221I	Electrolytic, 220 F 6.3WV	T
C615	F1J1H102A733	Ceramic, 1000PF 50WV	T
C651	F1H1E102A034	Ceramic, 1000PF 25WV	T
C652	F1H1C104A107	Ceramic, 0.1 F 16WV	T
C653	F1J0J4750003	Ceramic, 4.7 F 6.3WV	T
C654	F1H1C104A107	Ceramic, 0.1 F 16WV	T
C655	F1H1C104A107	Ceramic, 0.1 F 16WV	T
C721	F1H1C104A107	Ceramic, 0.1 F 16WV	T
C722	F2A1A181A835	Electrolytic, 180 F 10WV	T
C723	F2A1A181A835	Electrolytic, 180 F 10WV	T
C724	F1H1C104A107	Ceramic, 0.1 F 16WV	T
C732	F1K1E475A099	Ceramic, 4.7 F 16WV	T
C733	F1H1H471A842	Ceramic, 470PF 50WV	T
C734	F1H1H222A842	Ceramic, 2200PF 50WV	T
C735	F1K1E475A099	Ceramic, 4.7 F 16WV	T
C736	F2H1C331A023	Electrolytic, 330 F 16WV	T
C737	F2H1C331A023	Electrolytic, 330 F 16WV	T
C741	F1H1E103A086	Ceramic, 0.01 F 25WV	T

Ref. No.	Part No.	Part Name & Description	Remarks
C743	F1H1E103A086	Ceramic, 0.01 μ F 25WV	T
C744	F2H1C331A023	Electrolytic, 330 μ F 16WV	T
C745	F2H1C331A023	Electrolytic, 330 μ F 16WV	T
C761	F1H1C104A107	Ceramic, 0.01 μ F 16WV	T
C762	ECA1CM100I	Electrolytic, 10 μ F 16WV	T
C763	F2A1C101A029	Electrolytic, 100 μ F 16WV	T
C773	F2H1C331A023	Electrolytic, 330 μ F 16WV	T
C774	F2H1C331A023	Electrolytic, 330 μ F 16WV	T
C779	F1J1C105A173	Ceramic, 0.1 μ F 16WV	T
C801	F1J2A103A027	Ceramic, 0.01 μ F 100WV	T
C802	ECA0JM101I	Electrolytic, 100 μ F 6.3WV	T
C803	F1H1E103A086	Ceramic, 0.01 μ F 25WV	T
C804	F1H1H270A841	Ceramic, 27PF 50WV	T
C805	F1H1H270A841	Ceramic, 27PF 50WV	T
C806	F1H1H3R0A839	Ceramic, 3PF 50WV	T
C807	F1J1H120A732	Ceramic, 12PF 50WV	T
C808	F1J1H120A732	Ceramic, 12PF 50WV	T
C809	F1H1E103A086	Ceramic, 0.01 μ F 25WV	T
C810	ECA0JM101I	Electrolytic, 100 μ F 6.3WV	T
C811	F1H1E103A086	Ceramic, 0.01 μ F 25WV	T
C812	F1H1E103A086	Ceramic, 0.01 μ F 25WV	T
C813	F1H0J1050010	Ceramic, 1 μ F 6.3WV	T
C814	ECA1CM100I	Electrolytic, 10 μ F 16WV	T
C815	F1J0J4750003	Ceramic, 4.7 μ F 6.3WV	T
C817	ECA0JM471I	Electrolytic, 470 μ F 6.3WV	T
C818	ECA1AM101I	Electrolytic, 100 F 10WV	T
C820	F1H1C104A107	Ceramic, 0.1 F 16WV	T
C821	ECA1AM101I	Electrolytic, 100 F 10WV	T
C822	ECA1AM101I	Electrolytic, 100 F 10WV	T
C823	ECA1CM220I	Electrolytic, 22 F 16WV	T
C824	F1J0J4750003	Ceramic, 4.7 F 6.3WV	T
C825	F1J0J4750003	Ceramic, 4.7 F 6.3WV	T
C826	ECA1CM220I	Electrolytic, 22 F 16WV	T
C827	ECA1AM101I	Electrolytic, 100 F 10WV	T
C828	F1K0J1060017	Ceramic, 10 F 6.3WV	T
C829	F1H0J1050010	Ceramic, 1 F 6.3WV	T
C830	F1H1H331A900	Ceramic, 330PF 50WV	T
C831	F1H0J1050010	Ceramic, 1 F 6.3WV	T
C832	ECA1AM101I	Electrolytic, 100 F 10WV	T
C833	F1H1E102A034	Ceramic, 1000PF 25WV	T
C834	F1H1H181A842	Ceramic, 180PF 50WV	T
C835	F1H1H153A842	Ceramic, 0.01 F 25WV	T
C836	F1J0J4750003	Ceramic, 4.7 F 6.3WV	T

Ref. No.	Part No.	Part Name & Description	Remarks
C837	F1H0J1050010	Ceramic, 1 μF 6.3WV	T
C840	F1H1H560A841	Ceramic, 56PF 50WV	T
C841	F1H1H103A842	Ceramic, 0.01 μF 50WV	T
C842	F1H1H103A842	Ceramic, 0.01 μF 50WV	T
C843	ECA0JM221I	Electrolytic, 220 μF 6.3WV	T
C844	F1J1C104A148	Ceramic, 0.1 μF 16WV	T
C845	F1J1C104A148	Ceramic, 0.1 μF 16WV	T
C846	ECA0JM221I	Electrolytic, 220 μF 6.3WV	T
C847	ECA0JM221I	Electrolytic, 220 μF 6.3WV	T
C848	F1H1H103A842	Ceramic, 0.01 μF 50WV	T
RESISTORs			
R1	D0GD391JA017	Chip, 390 Ω 1/8W	T
R2	D0GD391JA017	Chip, 390 Ω 1/8W	T
R3	D0GD391JA017	Chip, 390 Ω 1/8W	T
R4	D0GD391JA017	Chip, 390 Ω 1/8W	T
R6	D0GD391JA017	Chip, 390 Ω 1/8W	T
R7	D0GD103JA017	Chip, 10k Ω 1/8W	T
R8	D0GD102JA017	Chip, 1k Ω 1/8W	T
R9	D0GD102JA017	Chip, 1k Ω 1/8W	T
R10	D0GD102JA017	Chip, 1k Ω 1/8W	T
R11	D0GD102JA017	Chip, 1k Ω 1/8W	T
R12	D0GDR00JA017	Chip, 0 Ω 1/8W	T
R13	D0GD222JA017	Chip, 2.2k Ω 1/8W	T
R14	D0GD103JA017	Chip, 10k Ω 1/8W	T
R15	D0GD331JA017	Chip, 330 1/8W	T
R16	D0GD330JA017	Chip, 33 1/8W	T
R17	D0GD151JA017	Chip, 150 1/8W	T
R18	D0GB561JA008	Chip, 560 1/10W	T
R19	D0GB392JA008	Chip, 3.9k 1/10W	T
R20	D0GB330JA008	Chip, 33 1/10W	T
R21	D0GB181JA008	Chip, 180 1/10W	T
R22	D0GB272JA008	Chip, 2.7k 1/10W	T
R23	D0GD472JA017	Chip, 4.7k 1/8W	T
R24	D0GB101JA008	Chip, 100 1/10W	T
R25	D0GB331JA008	Chip, 330 1/10W	T
R26	D0GB823JA008	Chip, 82k 1/10W	T
R27	D0GB102JA008	Chip, 1k 1/10W	T
R28	D0GD181JA017	Chip, 180 1/8W	T
R29	D0GB102JA008	Chip, 1k 1/10W	T
R30	D0GB102JA008	Chip, 1k 1/10W	T
R31	D0GB102JA008	Chip, 1k 1/10W	T
R32	D0GB102JA008	Chip, 1k 1/10W	T
R33	D0GB471JA008	Chip, 470 1/10W	T
R34	D0GB392JA008	Chip, 3.9k 1/10W	T

Ref. No.	Part No.	Part Name & Description	Remarks
R35	D0GB432JA008	Chip, 4.3k Ω 1/10W	T
R36	D0GD392JA017	Chip, 3.9 Ω 1/8W	T
R37	D0GB102JA008	Chip, 1k Ω 1/10W	T
R38	D0GDR00JA017	Chip, 0 Ω 1/8W	T
R39	D0GB102JA008	Chip, 1k Ω 1/10W	T
R40	D0GBR00JA008	Chip, 0 Ω 1/10W	T
R41	ERJ3RBD151V	Chip, 150 Ω 1/16W	T
R42	ERJ3RBD181V	Chip, 180 Ω 1/16W	T
R43	D0GB472JA008	Chip, 4.7k Ω 1/10W	T
R44	D0GBR00JA008	Chip, 0 Ω 1/10W	T
R45	D0GB102JA008	Chip, 1k Ω 1/10W	T
R46	D0GB393JA008	Chip, 39k Ω 1/10W	T
R47	D0GB103JA008	Chip, 10k Ω 1/10W	T
R48	D0GB272JA008	Chip, 2.7k Ω 1/10W	T
R49	D0GD333JA017	Chip, 33k Ω 1/8W	T
R50	D0GD102JA017	Chip, 1k Ω 1/8W	T
R51	D0GD101JA017	Chip, 100 Ω 1/8W	T
R52	D0GD563JA017	Chip, 56k Ω 1/8W	T
R53	D0GB473JA008	Chip, 47k Ω 1/10W	T
R54	D0GB563JA008	Chip, 56k Ω 1/10W	T
R55	D0GB472JA008	Chip, 4.7k Ω 1/10W	T
R56	D0GB272JA008	Chip, 2.7k Ω 1/10W	T
R58	D0GB562JA008	Chip, 5.6 Ω 1/10W	T
R59	D0GDR00JA017	Chip, 0 Ω 1/8W	T
R100	D0GB223JA008	Chip, 22k Ω 1/10W	T
R101	D0GB333JA008	Chip, 33k Ω 1/10W	T
R102	D0GB123JA008	Chip, 12k Ω 1/10W	T
R103	D0GB102JA008	Chip, 1k 1/10W	T
R104	D0GB473JA008	Chip, 47k 1/10W	T
R106	D0GB101JA008	Chip, 100k 1/10W	T
R107	D0GD472JA017	Chip, 4.7k 1/8W	T
R108	D0GD472JA017	Chip, 4.7k 1/8W	T
R110	D0GD202JA017	Chip, 2k 1/8W	T
R114	D0GB103JA008	Chip, 10k 1/10W	T
R115	D0GB222JA008	Chip, 2.2k 1/10W	T
R116	D0GD272JA017	Chip, 2.7k 1/8W	T
R117	D0GBR00JA008	Chip, 0 1/10W	T
R148	D0GB103JA008	Chip, 10k 1/10W	T
R168	D0GBR00JA008	Chip, 0 1/10W	T
R201	D0GB102JA008	Chip, 1k 1/10W	T
R202	D0GB103JA008	Chip, 10k 1/10W	T
R209	D0GB103JA008	Chip, 10k 1/10W	T
R210	D0GB103JA008	Chip, 10k 1/10W	T
R213	D0GD104JA017	Chip, 100k 1/8W	T
R214	D0GD562JA017	Chip, 5.6k 1/8W	T
R215	D0GB273JA008	Chip, 27k 1/10W	T
R216	D0GD561JA017	Chip, 560 1/8W	T

Ref. No.	Part No.	Part Name & Description	Remarks
R217	D0GD473JA017	Chip, 47k Ω 1/8W	T
R313	D0GD104JA017	Chip, 100k Ω 1/8W	T
R314	D0GD562JA017	Chip, 5.6k Ω 1/8W	T
R315	D0GB273JA008	Chip, 27k Ω 1/10W	T
R316	D0GD561JA017	Chip, 560 Ω 1/8W	T
R317	D0GD473JA017	Chip, 47k Ω 1/8W	T
R600	D0GD473JA017	Chip, 47k Ω 1/8W	T
R601	D0GB102JA008	Chip, 1k Ω 1/10W	T
R602	D0GD101JA017	Chip, 100 Ω 1/8W	T
R603	D0GB102JA008	Chip, 1k Ω 1/10W	T
R604	D0GB473JA008	Chip, 47k Ω 1/10W	T
R605	D0GB473JA008	Chip, 47k Ω 1/10W	T
R608	D0GB102JA008	Chip, 1k Ω 1/10W	T
R609	D0GB102JA008	Chip, 1k Ω 1/10W	T
R610	D0GB102JA008	Chip, 1k Ω 1/10W	T
R611	D0GB102JA008	Chip, 1k Ω 1/10W	T
R612	D0GD101JA017	Chip, 100 Ω 1/8W	T
R613	D0GB103JA008	Chip, 10k Ω 1/10W	T
R614	D0GB102JA008	Chip, 1k Ω 1/10W	T
R615	D1BB2703A012	270k Ω 1/10W	T
R616	D1BB1503A056	150k Ω 1/16W	T
R617	D1BB3902A012	39k Ω 1/10W	T
R618	ERJ3RBD433V	Chip, 43k Ω 1/16W	T
R619	D0GB102JA008	Chip, 1k Ω 1/10W	T
R622	D0GD331JA017	Chip, 330 Ω 1/8W	T
R623	D0GB103JA008	Chip, 10k Ω 1/10W	T
R624	D0GD102JA017	Chip, 1k Ω 1/8W	T
R625	D0GB102JA008	Chip, 1k 1/10W	T
R626	D0GB102JA008	Chip, 1k 1/10W	T
R652	D0GBR00JA008	Chip, 0k 1/10W	T
R654	D0GB473JA008	Chip, 47k 1/10W	T
R721	D0GN2R7JA005	Chip, 2.7k 1/2W	T
R731	D1BD1201A030	1.2k 1/8W	T
R732	D1BB7501A012	7.5k 1/10W	T
R741	D0GDR00JA017	Chip, 0 1/8W	T
R743	D0YFR00J0001	Chip, 0 1/8W	T
R744	D0YFR00J0001	Chip, 0 1/8W	T
R745	D0GG150JA012	Chip, 15 1/4W	T
R751	D0GB473JA008	Chip, 47k 1/10W	T
R752	D0GN102JA005	Chip, 1k 1/2W	T
R753	D0GN102JA005	Chip, 1k 1/2W	T
R754	D0GN102JA005	Chip, 1k 1/2W	T
R759	D0YFR00J0001	Chip, 0 1/8W	T
R760	D0YFR00J0001	Chip, 0 1/8W	T
R761	D0GG100JA012	Chip, 10 1/4W	T
R762	D0GB103JA008	Chip, 10k 1/10W	T
R763	D0GD102JA017	Chip, 1k 1/8W	T

Ref. No.	Part No.	Part Name & Description	Remarks
R764	D0YFR00J0001	Chip, 0 Ω 1/8W	T
R767	D0YFR00J0001	Chip, 0 Ω 1/8W	T
R768	D0YFR00J0001	Chip, 0 Ω 1/8W	T
R769	D0YFR00J0001	Chip, 0 Ω 1/8W	T
R770	D0YFR00J0001	Chip, 0 Ω 1/8W	T
R773	D0YFR00J0001	Chip, 0 Ω 1/8W	T
R774	D0YFR00J0001	Chip, 0 Ω 1/8W	T
R775	D0YFR00J0001	Chip, 0 Ω 1/8W	T
R776	D0YFR00J0001	Chip, 0 Ω 1/8W	T
R777	D0YFR00J0001	Chip, 0 Ω 1/8W	T
R778	D0YFR00J0001	Chip, 0 Ω 1/8W	T
R780	D0YFR00J0001	Chip, 0 Ω 1/8W	T
R781	D0YFR00J0001	Chip, 0 Ω 1/8W	T
R782	D0YFR00J0001	Chip, 0 Ω 1/8W	T
R783	D0YFR00J0001	Chip, 0 Ω 1/8W	T
R784	D0YFR00J0001	Chip, 0 Ω 1/8W	T
R785	D0YFR00J0001	Chip, 0 Ω 1/8W	T
R786	D0YFR00J0001	Chip, 0 Ω 1/8W	T
R787	D0YFR00J0001	Chip, 0 Ω 1/8W	T
R802	D0GD223JA017	Chip, 22k Ω 1/8W	T
R803	D0GD223JA017	Chip, 22k Ω 1/8W	T
R804	D0GD102JA017	Chip, 1k Ω 1/8W	T
R805	D0GB101JA008	Chip, 100k Ω 1/10W	T
R806	D0GB102JA008	Chip, 1k Ω 1/10W	T
R807	D0GB102JA008	Chip, 1k Ω 1/10W	T
R808	D0GB912JA008	Chip, 9.1k Ω 1/10W	T
R809	D0GB102JA008	Chip, 1k Ω 1/10W	T
R810	D0GB221JA008	Chip, 220 1/10W	T
R811	D0GB221JA008	Chip, 220 1/10W	T
R812	D0GB221JA008	Chip, 220 1/10W	T
R813	D0GB104JA008	Chip, 100k 1/10W	T
R814	D1BB8201A012	8.2k 1/10W	T
R815	D1BB1002A012	10k 1/10W	T
R816	D1BB2201A012	2.2k 1/10W	T
R817	D0GB222JA008	Chip, 2.2k 1/10W	T
R818	D0GB101JA008	Chip, 100 1/10W	T
R819	D0GD391JA017	Chip, 390 1/8W	T
R820	D0GD391JA017	Chip, 390 1/8W	T
R821	D0GD680JA017	Chip, 68 1/8W	T
R822	D0GB100JA008	10 1/10W	T
R824	D0GBR00JA008	Chip, 0 1/10W	T
R825	ERJ3RBD361V	Chip, 360 1/16W	T
R826	D0GB202JA008	Chip, 2k 1/10W	T
R827	D0GB302JA008	Chip, 3k 1/10W	T
R828	D0GB914JA008	Chip, 910k 1/10W	T
R829	D0GD914JA017	Chip, 910k 1/8W	T
R830	D0GD102JA017	Chip, 1k 1/8W	T

Ref. No.	Part No.	Part Name & Description	Remarks
R831	D0GD102JA017	Chip, 1k Ω 1/8W	T
R832	D0GBR00JA008	Chip, 0 Ω 1/10W	T
R834	D0GB331JA008	Chip, 330 Ω 1/10W	T
R835	D0GB102JA008	Chip, 1k Ω 1/10W	T
R836	D0GB273JA008	Chip, 27k Ω 1/10W	T
R837	D0GB333JA008	Chip, 33k Ω 1/10W	T
R838	D0GB331JA008	Chip, 330 Ω 1/10W	T
R839	D0GB331JA008	Chip, 330 Ω 1/10W	T
R841	D0GD914JA017	Chip, 910k Ω 1/8W	T
R855	D0GD222JA017	Chip, 2.2k Ω 1/8W	T
R856	D0GD221JA017	Chip, 220 Ω 1/8W	T
R857	D0GD221JA017	Chip, 220 Ω 1/8W	T
R858	D0YFR00J0001	Chip, 0 Ω 1/8W	T
R859	D0YFR00J0001	Chip, 0 Ω 1/8W	T
R860	D0YFR00J0001	Chip, 0 Ω 1/8W	T
R861	D0GN102JA005	Chip, 1k Ω 1/2W	T
R863	D0GDR00JA017	Chip, 0 Ω 1/8W	T
R864	D0GDR00JA017	Chip, 0 Ω 1/8W	T
R865	D0GDR00JA017	Chip, 0 Ω 1/8W	T
R866	D0GD102JA017	Chip, 1k Ω 1/8W	T
R867	D0GB513JA008	Chip, 51k Ω 1/10W	T
R868	D0GB513JA008	Chip, 51k Ω 1/10W	T
R869	D0YFR00J0001	Chip, 0 Ω 1/8W	T
CONNECTORs			
CN601	K1KA06AA0231	Connector, 6P	T
CN605	K1AB113B0002	Connector, 13P	T
CN606	K1KA04B00270	Connector, 4P	T
COILs			
FL6	ELJFCR68MF	Coil	T
L2	ELJFCR27MF	Coil	T
L3	ELJFCR27MF	Coil	T
L4	ELJFCR27MF	Coil	T
L5	ELJFCR27MF	Coil	T
L6	G1CR22JA0036	Coil	T
L7	G1C100JA0036	Coil	T
L8	G1C1R8JA0036	Coil	T
L9	G1C2R7JA0036	Coil	T
L10	G1C2R2JA0036	Coil	T
L11	G1C100JA0036	Coil	T
L12	G3BRB0000013	Coil	T
L13	G3A1R2C00006	Coil	T
L15	G1C220JA0036	Coil	T
L21	G1C100JA0036	Coil	T
L22	G1C220JA0036	Coil	T
L23	ELJFCR27MF	Coil	T
L24	ELJFCR27MF	Coil	T
L29	ELJFCR27MF	Coil	T
L30	ELJFCR27MF	Coil	T

Ref. No.	Part No.	Part Name & Description	Remarks
L601	G1C101JA0036	Coil	T
L602	G1C101JA0036	Coil	T
L731	G1C101Z00010	Coil	T
L732	G1C101Z00010	Coil	T
L771	G0C931K00001	Coil	T
L772	G1C221JA0036	Coil	T
L801	G1C330JA0036	Coil	T
L802	G1C100JA0036	Coil	T
L803	G1C100JA0036	Coil	T
L804	G1C100JA0036	Coil	T
L805	G1C100JA0036	Coil	T
L806	G1C100JA0036	Coil	T
Filters			
FL2	J0JCC0000011	Filter	T
FL3	J0JCC0000011	Filter	T
FL4	J0JCC0000011	Filter	T
FL5	J0JCC0000011	Filter	T
FL7	J0JCC0000011	Filter	T
FL8	J0B1075A0147	Filter	T
FL14	J0B5504A0026	Filter	T
FL201	J0JCC0000011	Filter	T
FL301	J0JCC0000011	Filter	T
FL601	J0JCC0000011	Filter	T
FL771	J0JCC0000159	Filter	T
FL801	J0JCC0000011	Filter	T
FL802	J0JHC0000026	Filter	T
SFL1	J0C3805A0002	Filter	T
SWITCH			
SW601	K0F111B00044	Switch	T
CRYSTALs			
X601	H2B168500002	Crystal	T
X801	H0D177500001	Crystal	T
X802	H2C503300001	Crystal	T
XL1	H0D213500002	Crystal Oscillator	T
XL2	H2A500300010	Crystal Oscillator	T
Network Resistors			
RA10	D1HB1024A031	Network Resistor	T
RA16	D1HB1024A031	Network Resistor	T
RA601	D1H81024A043	Network Resistor	T
RA602	D1H84724A043	Network Resistor	T
RA603	D1H84724A043	Network Resistor	T
RA604	D1H81024A043	Network Resistor	T
RA605	D1H84724A043	Network Resistor	T
RA606	D1H81024A043	Network Resistor	T
RA607	D1H81024A043	Network Resistor	T
RA609	D1H81024A043	Network Resistor	T
RA610	D1H81024A043	Network Resistor	T
RA611	D1H81024A043	Network Resistor	T
RA612	D1H84724A043	Network Resistor	T

Ref. No.	Part No.	Part Name & Description	Remarks
RA613	D1H81024A043	Network Resistor	T
RA614	D1H81024A043	Network Resistor	T
RA615	D1H84724A043	Network Resistor	T
RA616	D1H81024A043	Network Resistor	T
RA801	D1HB1024A031	Network Resistor	T
Volumes			
VR1	EVM3YSX50B53	Volume	T
VR2	EVM3YSX50B54	Volume	T
VR3	EVM3YSX50B14	Volume	T
VR4	EVM3YSX50B53	Volume	T
VR651	EVM3YSX50BE4	Volume	T
Accessories			
PRINTINGs			
	YFM284C548ZA	Operating Instructions	T
Components			
	YEAA12692A	TV Antenna (L)	T
	YEAA12693A	TV Antenna (R)	T
	EUR7641040	Remote Control Unit (including a battery)	T
	CR2025/1F	Lithium Battery	T
Installation Hardware (For Installation)			
	ZZFPTUN153U	Installation Kit (Tapping Screw, Velcro Tape)	T
	YEP9FZ3041	Anteena Kit (Antenna Clamp, Cord Clamp)	T
Installation Hardware (For Wiring)			
	YEAJ012884	Power Connector	T
	YEAJ071812	Head Unit/Expansion Module Connecting Cable (3m) (for Expansion Module)	T
	YEAJ071819	RCA Cord (3m) (for video connector)	T
	YEAJ071820	RCA Cord (3m) (for audio connector)	T
	YEAJ071821	RCA Cord (3m) (for remote control connector)	T
Mechanical Parts			
MISCELLANEOUS			
AT1	K4CD01000015	Terminal	T
AT2	K4CD01000015	Terminal	T
AT3	K4CD01000015	Terminal	T
AT4	K4CD01000015	Terminal	T
JK1	K2HC303B0001	Jack	T
JK2	K2HC303B0001	Jack	T
JK3	K2HC303B0001	Jack	T
JK4	K2HC303B0001	Jack	T
JK201	K2HA303B0034	Jack	T
JK801	K2HA102A0028	Jack	T
1	YFA034C062ZA	Upper Cover	T

Ref. No.	Part No.	Part Name & Description	Remarks
2	YFX214C431ZA	Bracket, Connector/ANT	T
3	AAPB9786A0	Main PCB w/Component	T/RTL
4	YFX214C432ZA	Bracket, CN606	T
5	YFR044C013ZA	RCA Cap	T
6	YFA054C051ZA	Under Cover	T
11	XTB3+6FFZ	Tapping Screw	T
12	YEJT034C001N	Screw	T

9. EXPLODED VIEW

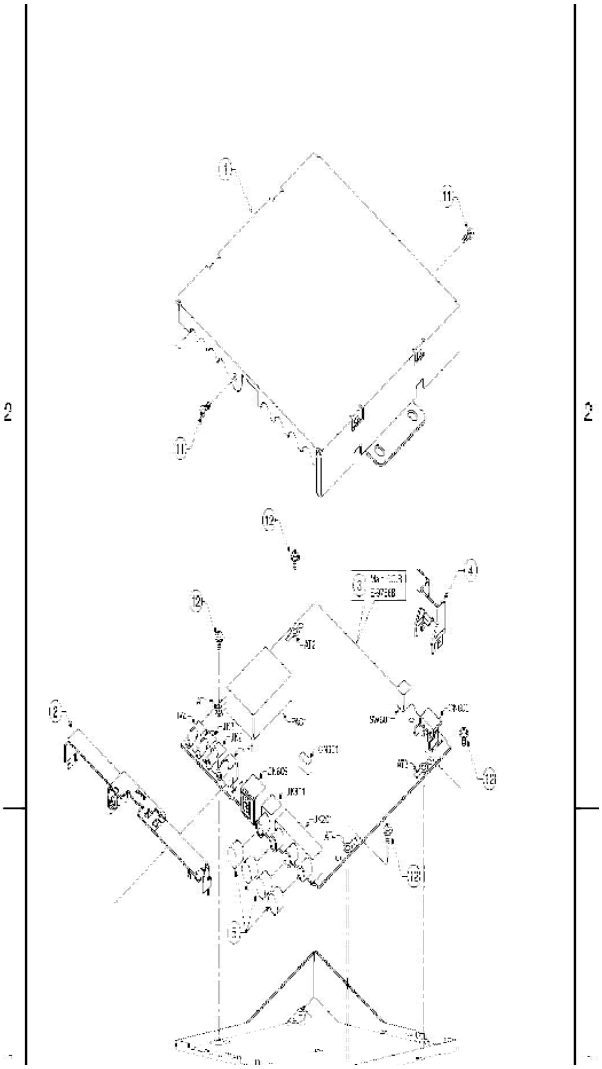

10. WIRING DIAGRAM

10.1. Main Block (Top View)

10.2. Main Block (Bottom View)

11. SCHEMATIC DIAGRAM

11.1. Main Block

12. BLOCK DIAGRAM

12.1. Main Block-1

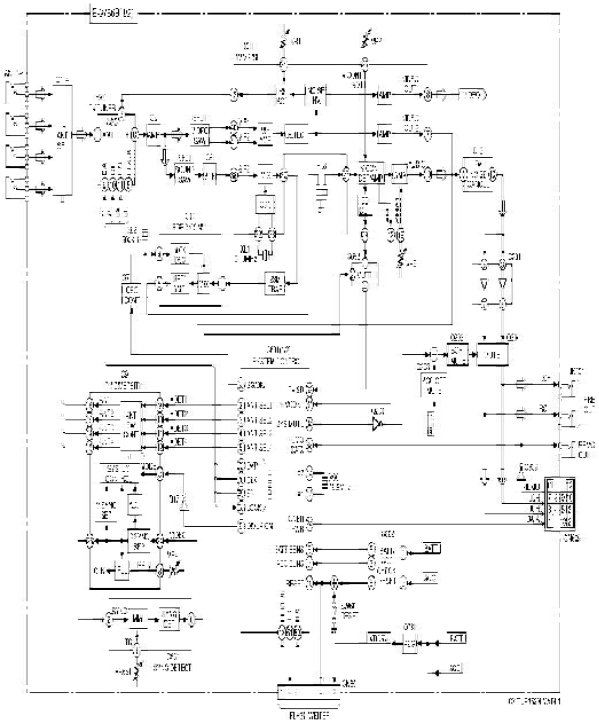

12.2. Main Block-2

13. SCHEMATIC DIAGRAM for Printing with A4 Size

13.1. Main Block (Left Side)

13.2. Main Block (Right Side)

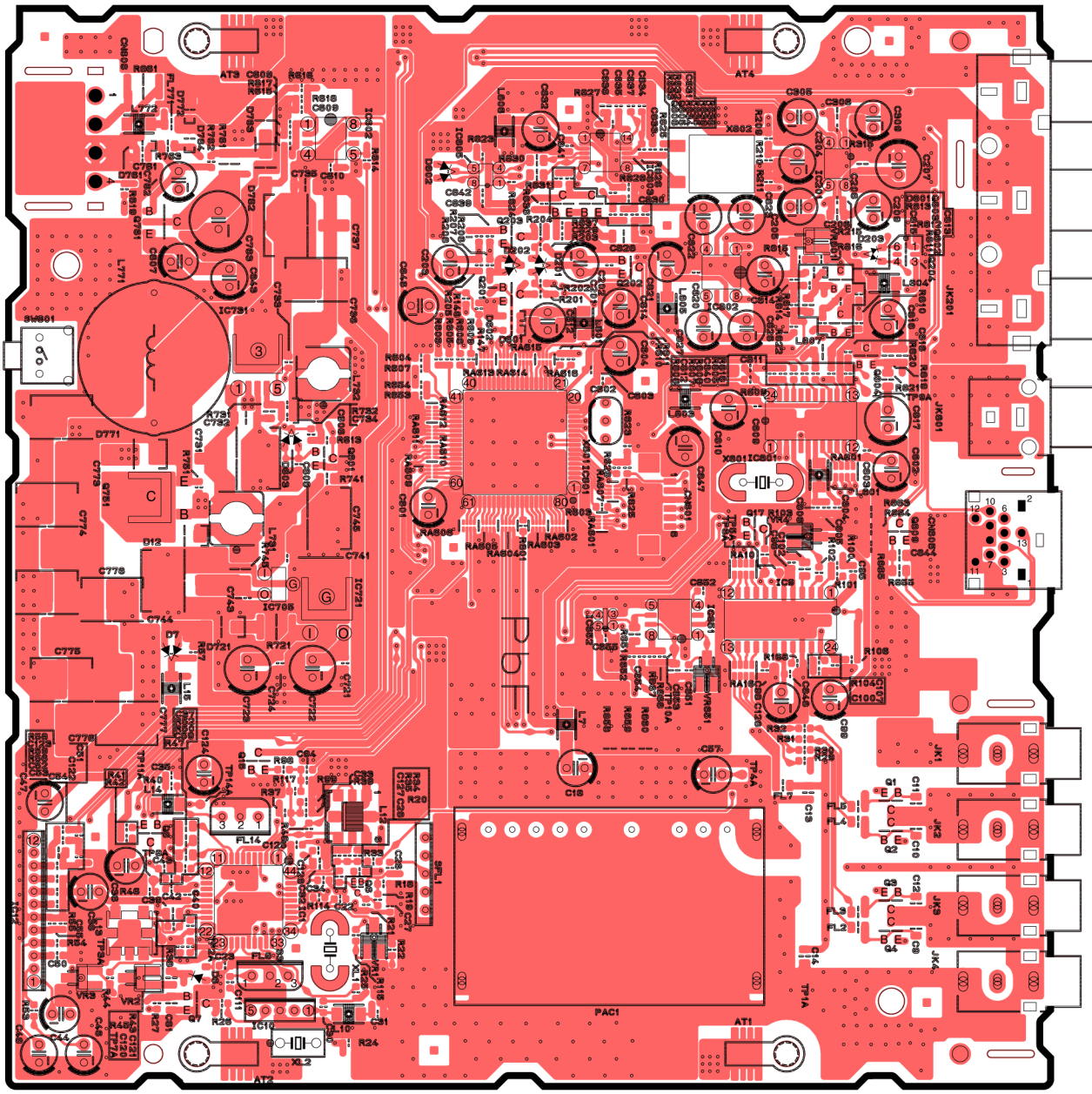

[E-9786B] [Top view]

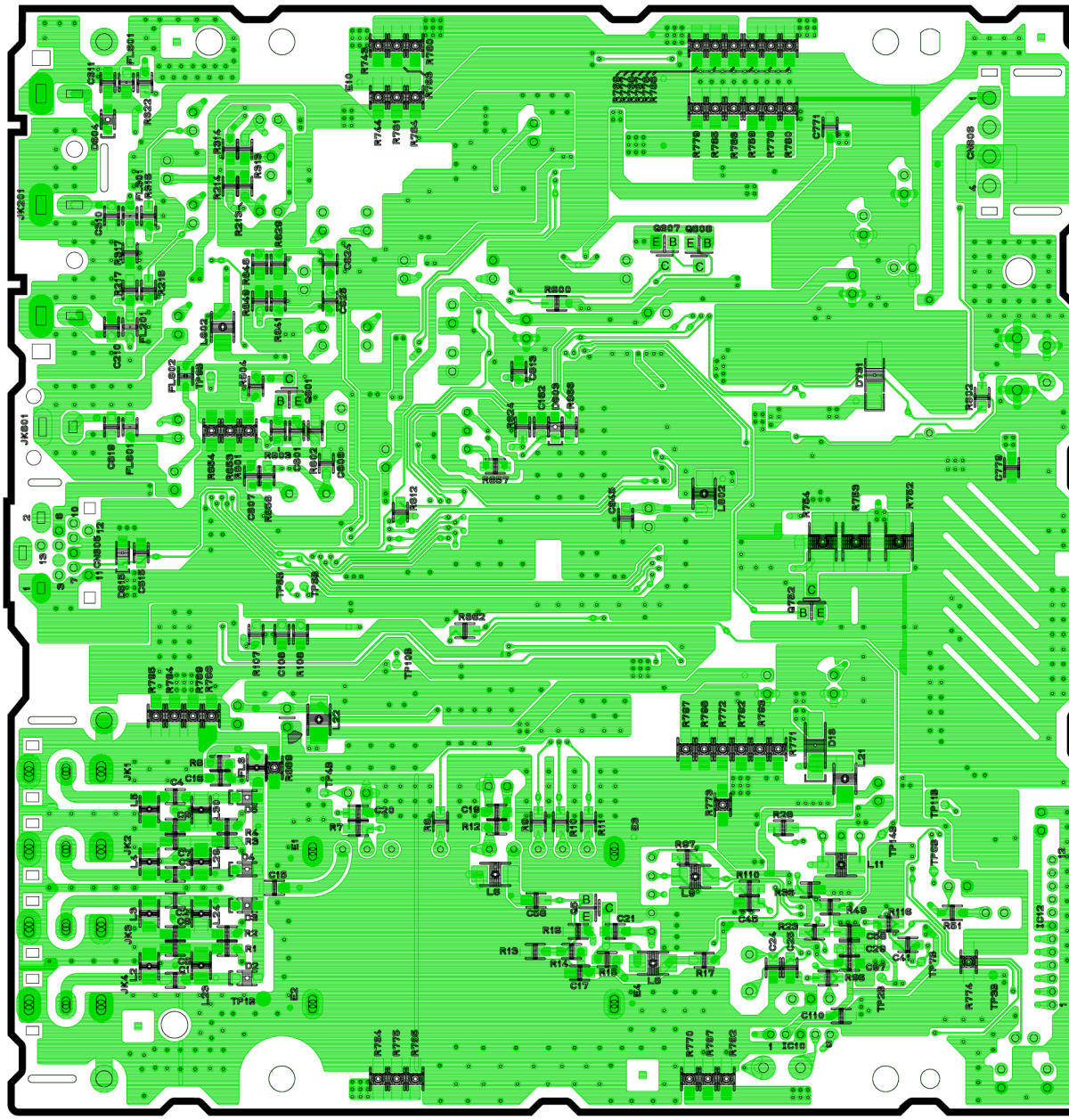

[E-9786B] [Bottom view]

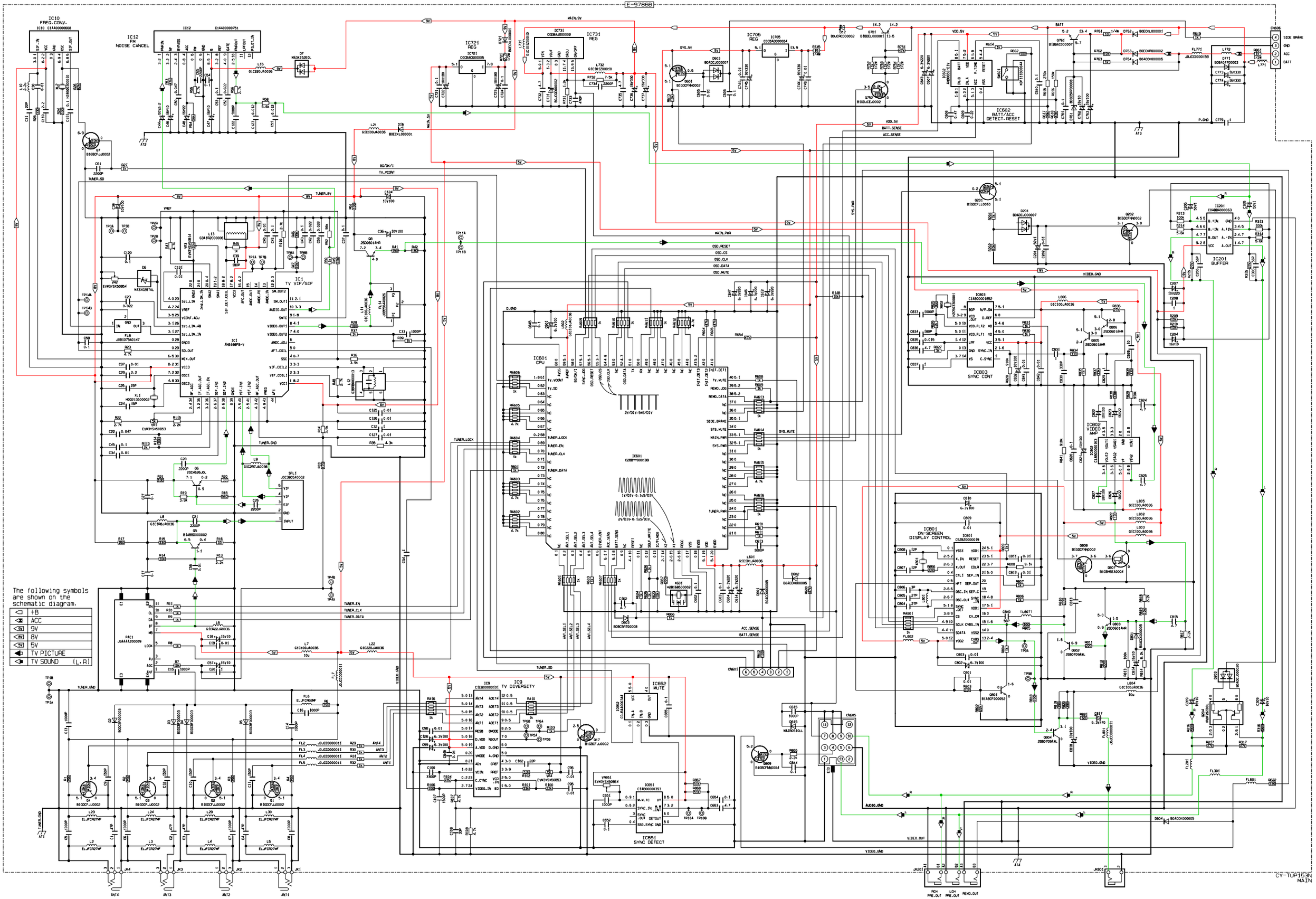

The following symbols are shown on the schematic diagram.

◁	+B
◁	ACC
◁ 9V	9V
◁ 8V	8V
◁ 5V	5V
◁	TV PICTURE
◁	TV SOUND (L.R)

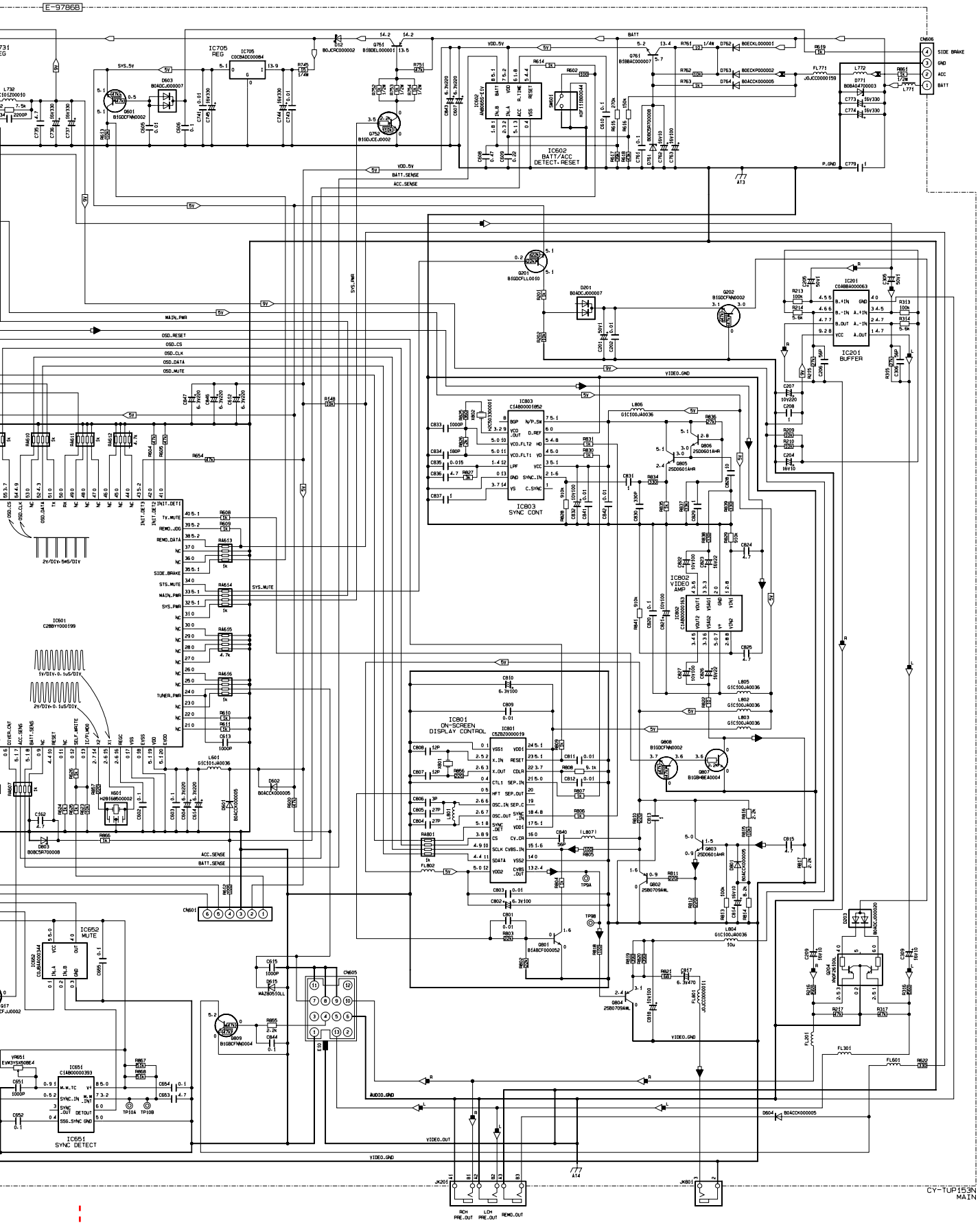
E-97866
IC705 REG
IC602 BATT/ACC DETECT-RESET
IC803 SYNC CONT
IC801 ON-SCREEN DISPLAY CONTROL
IC802 VIDEO AMP
IC201 BUFFER
IC652 MUTE
IC651 SYNC DETECT
CN606
SIDE BRAKE
GND
ACC
BATT
CY-TUP153N
MAIN

11 SCHEMATIC DIAGRAM
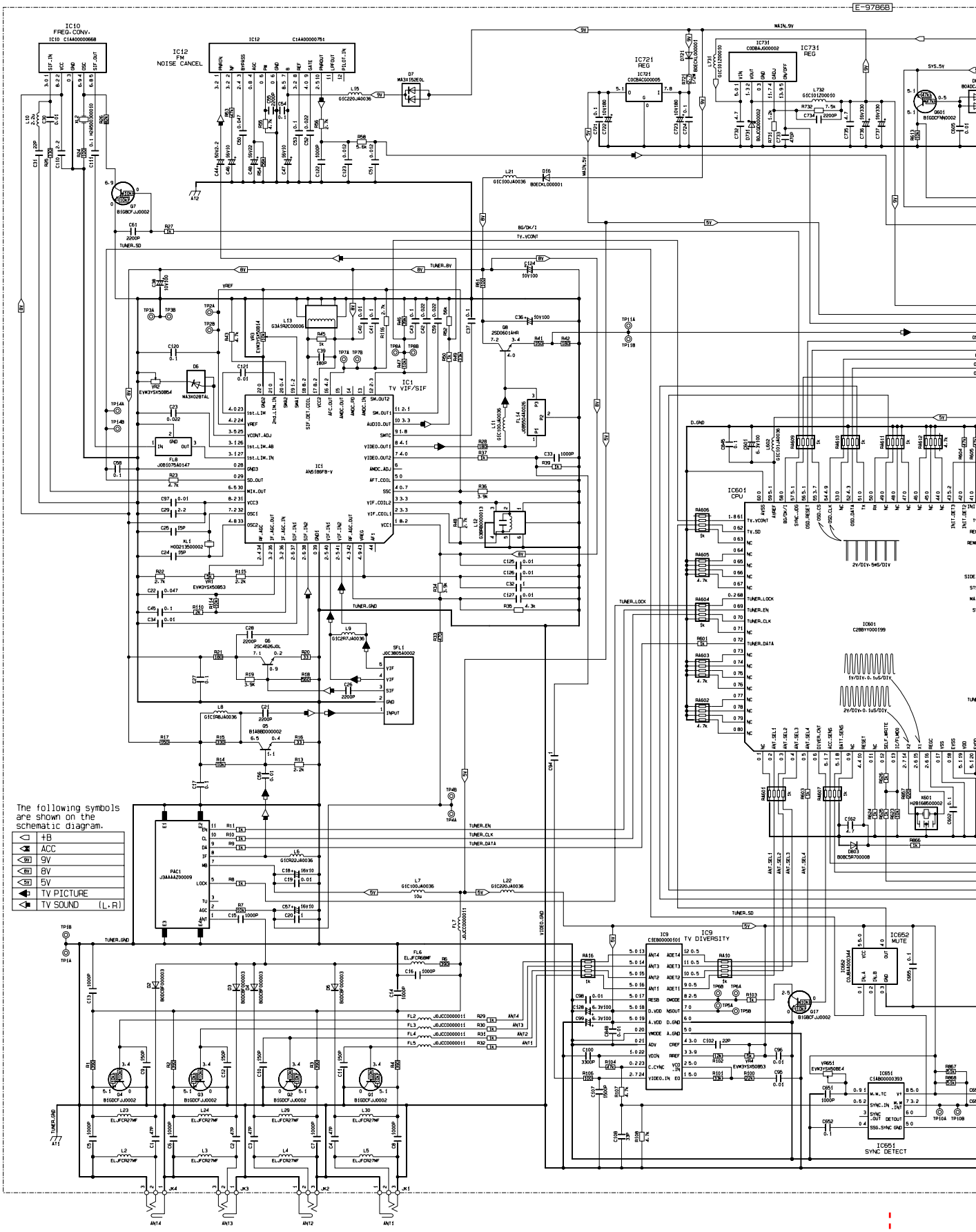
11.1. Main Block